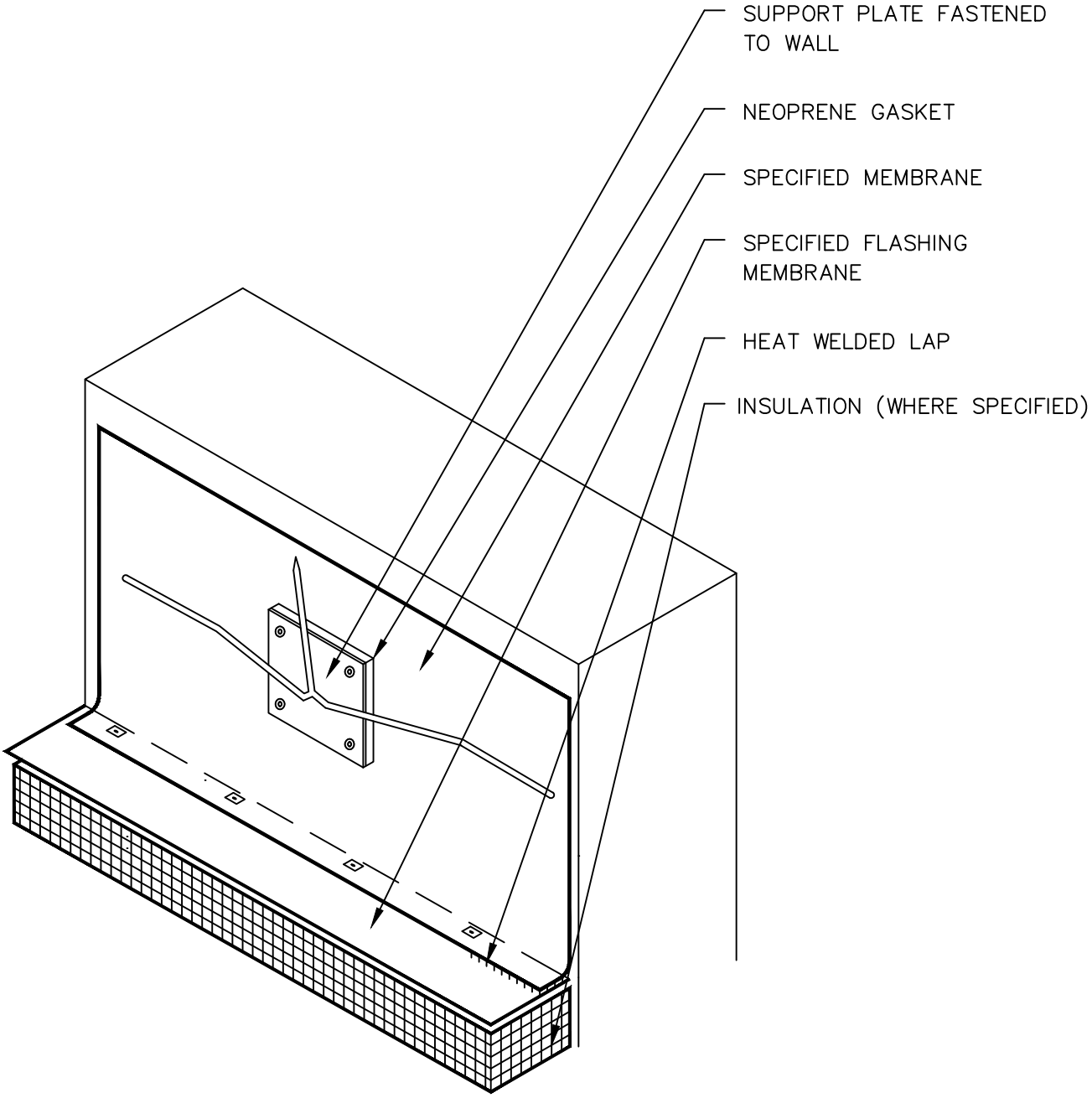

TREMCO
Roofing & Building Maintenance

SHEET TITLE:
WALL MOUNTED
LIGHTNING ROD DETAIL

SCALE:
NTS

DRAWING No.:
DWG NO. 36

2023