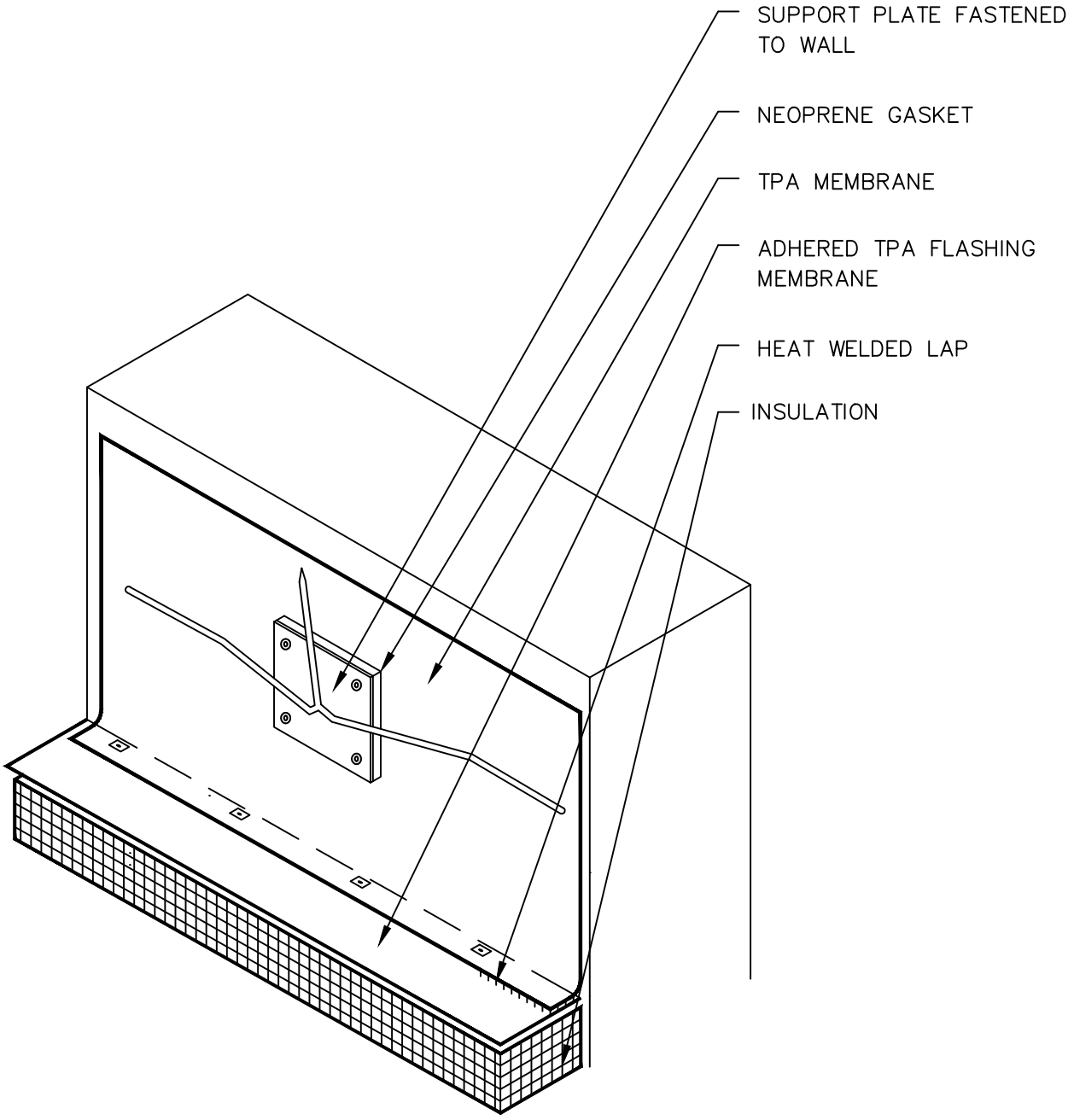

TREMCO
Roofing & Building Maintenance

SHEET TITLE:
WALL MOUNTED
LIGHTNING ROD DETAIL

SCALE:
NTS

DRAWING No.:
DWG NO. TPA-MA-33

2023