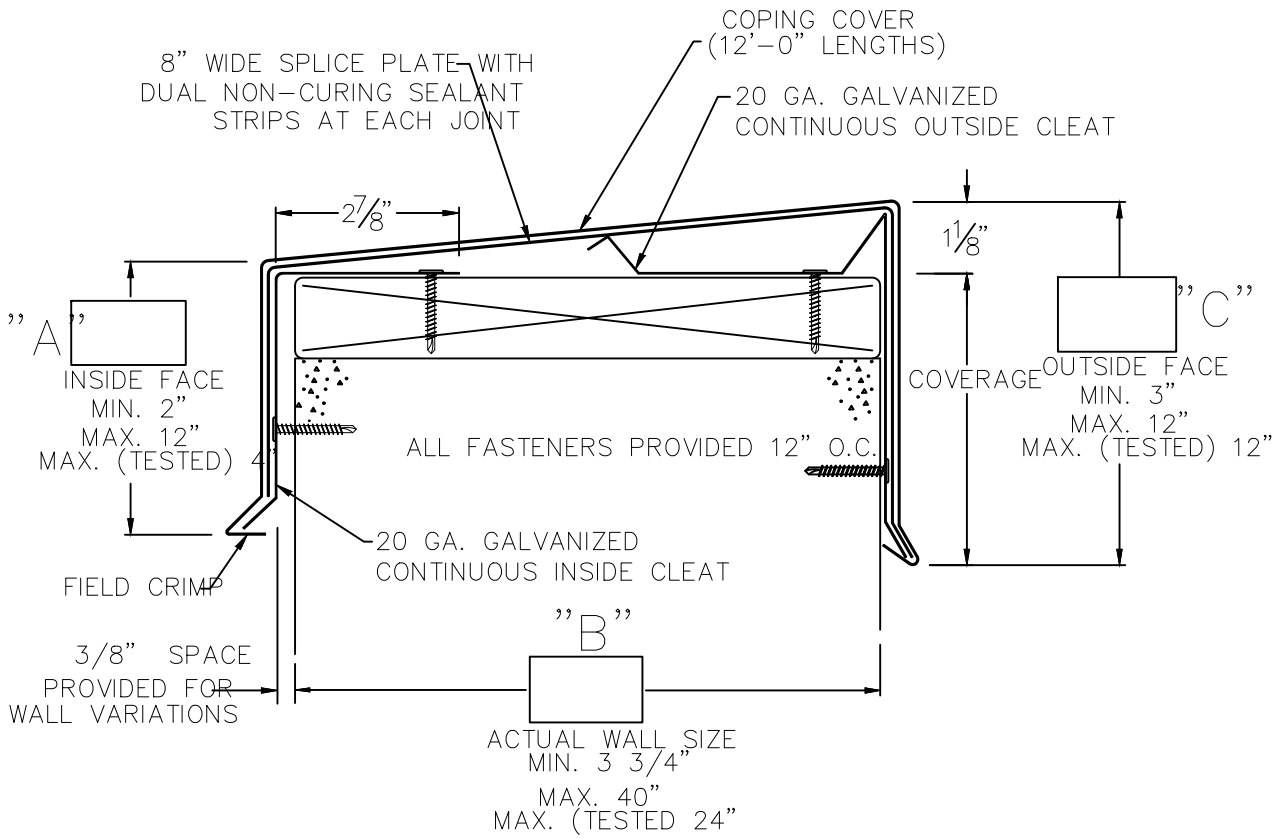

NOTE: TAPERED

TREMCO Roofing & Building Maintenance	SHEET TITLE: TREMLOCK INFINITY CONTINUOUS CLEAT COPING	SCALE: NTS DRAWING No.: 18.0

2023