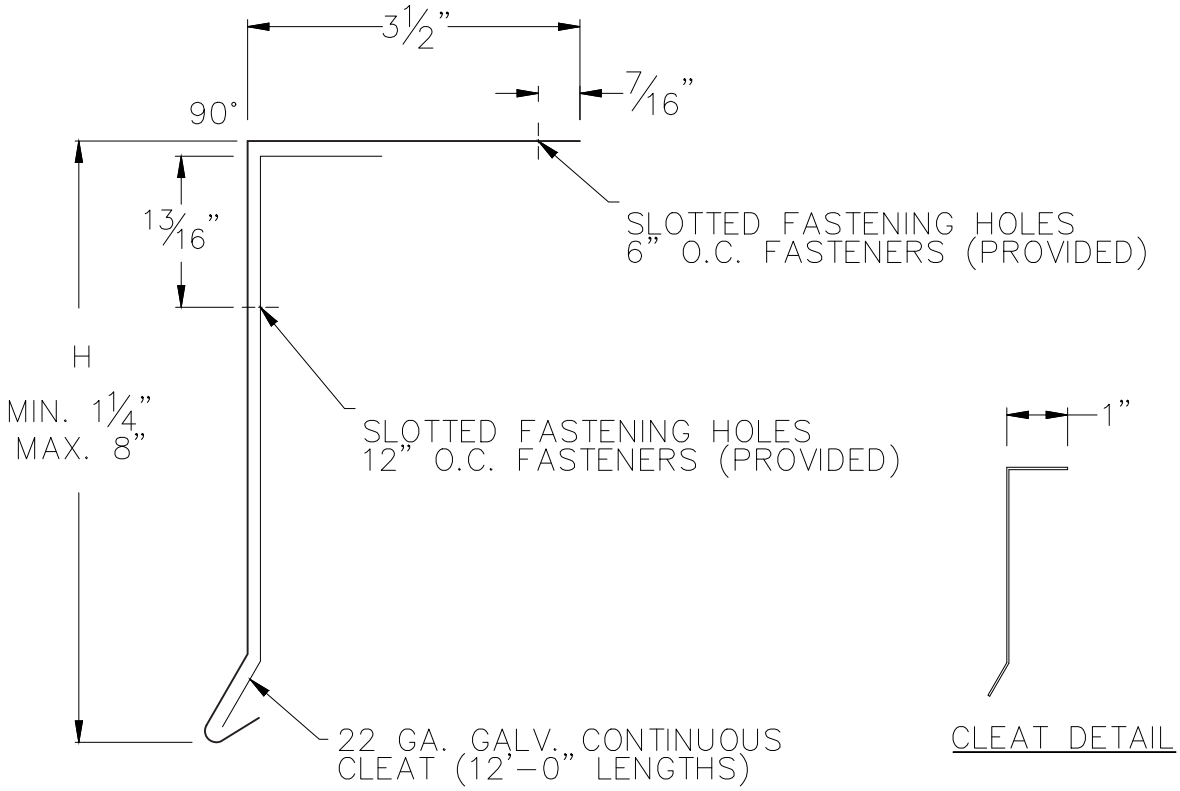

NOTE:

TREMCO Roofing & Building Maintenance	SHEET TITLE: TREMLOCK ECO TPA DRIP EDGE	SCALE: NTS DRAWING No.: 13.0

2023