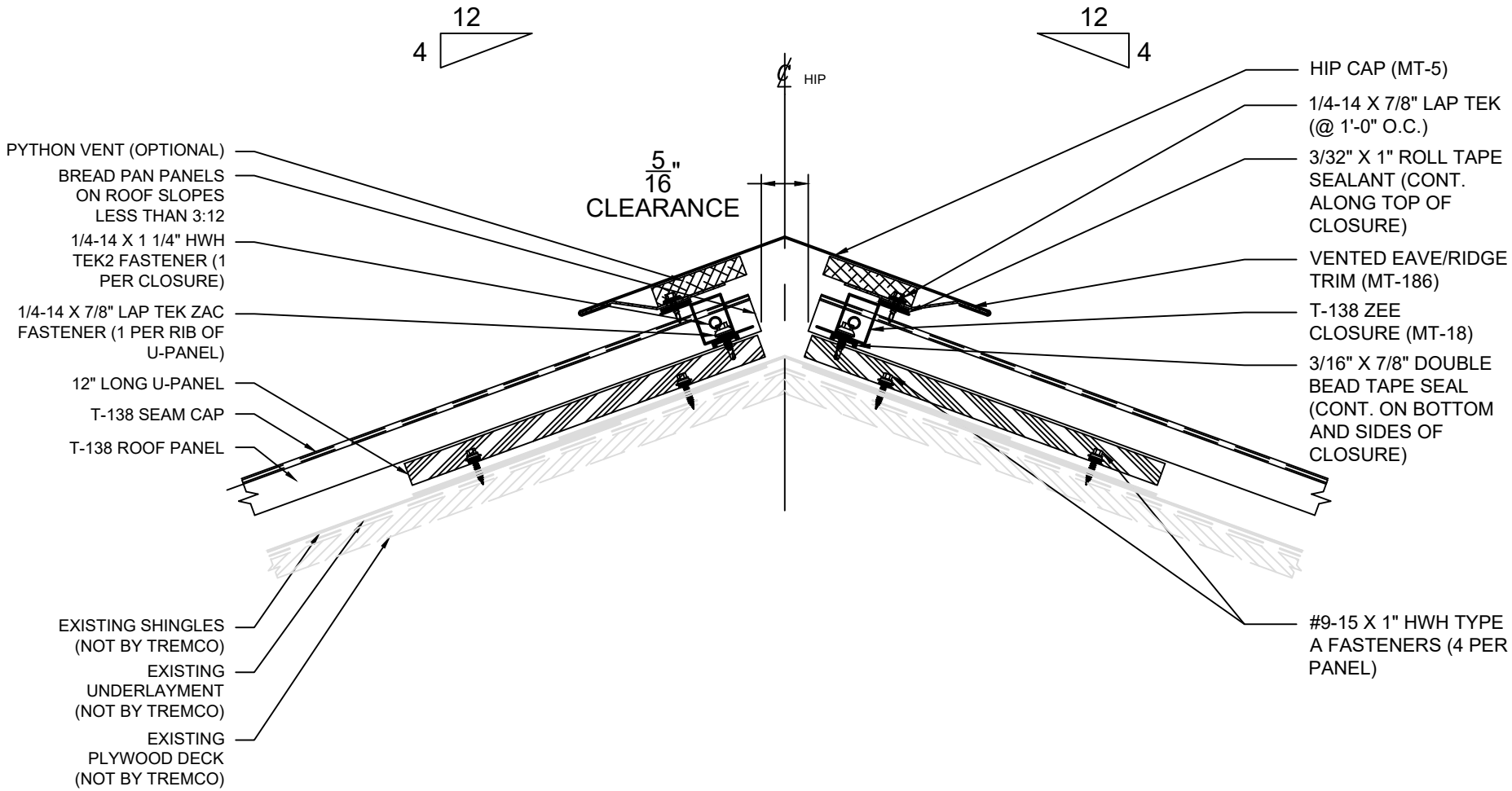

TREMCO
Roofing & Building Maintenance

SHEET TITLE:
TREMLOCK T-138 OVER SHINGLES HIP

SCALE:
NTS

DRAWING No.:
DWG NO. T-138-27

2023