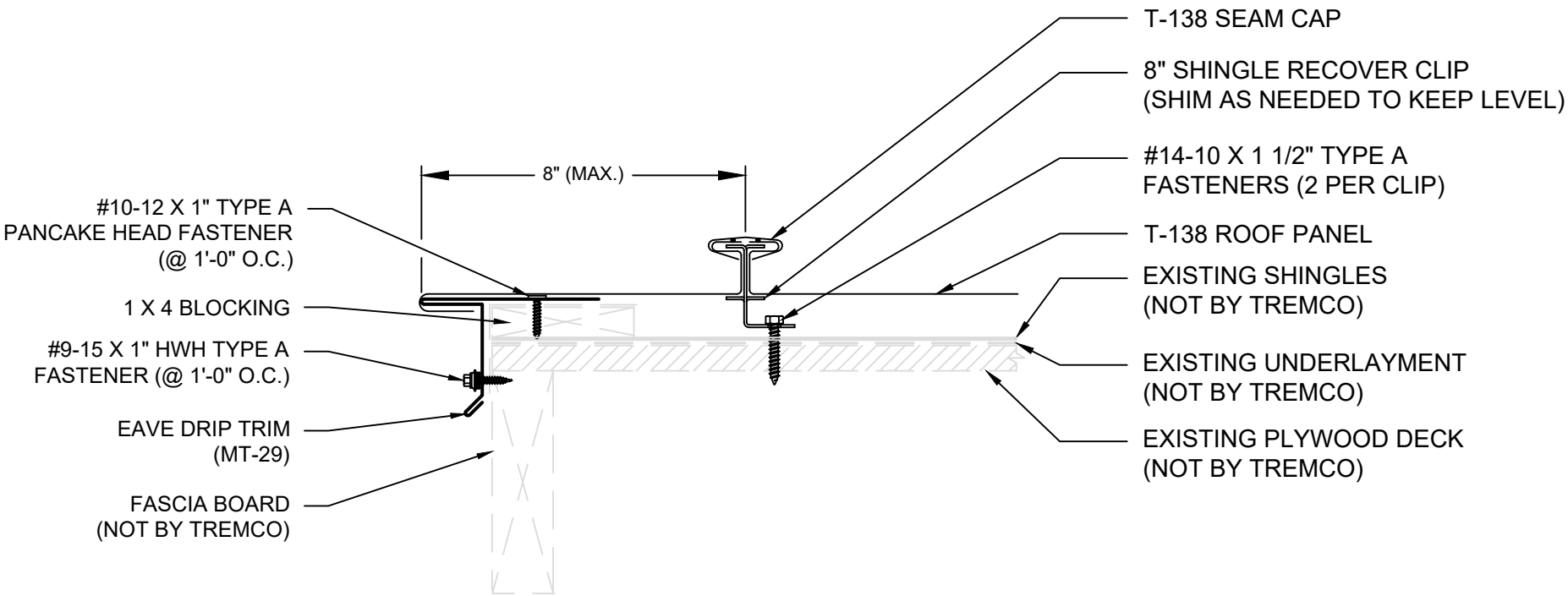

TREMCO
Roofing & Building Maintenance

SHEET TITLE:
TREMLOCK T-138 OVER SHINGLES RAKE

SCALE:
NTS

DRAWING No.:
DWG NO. T-138-29

2023