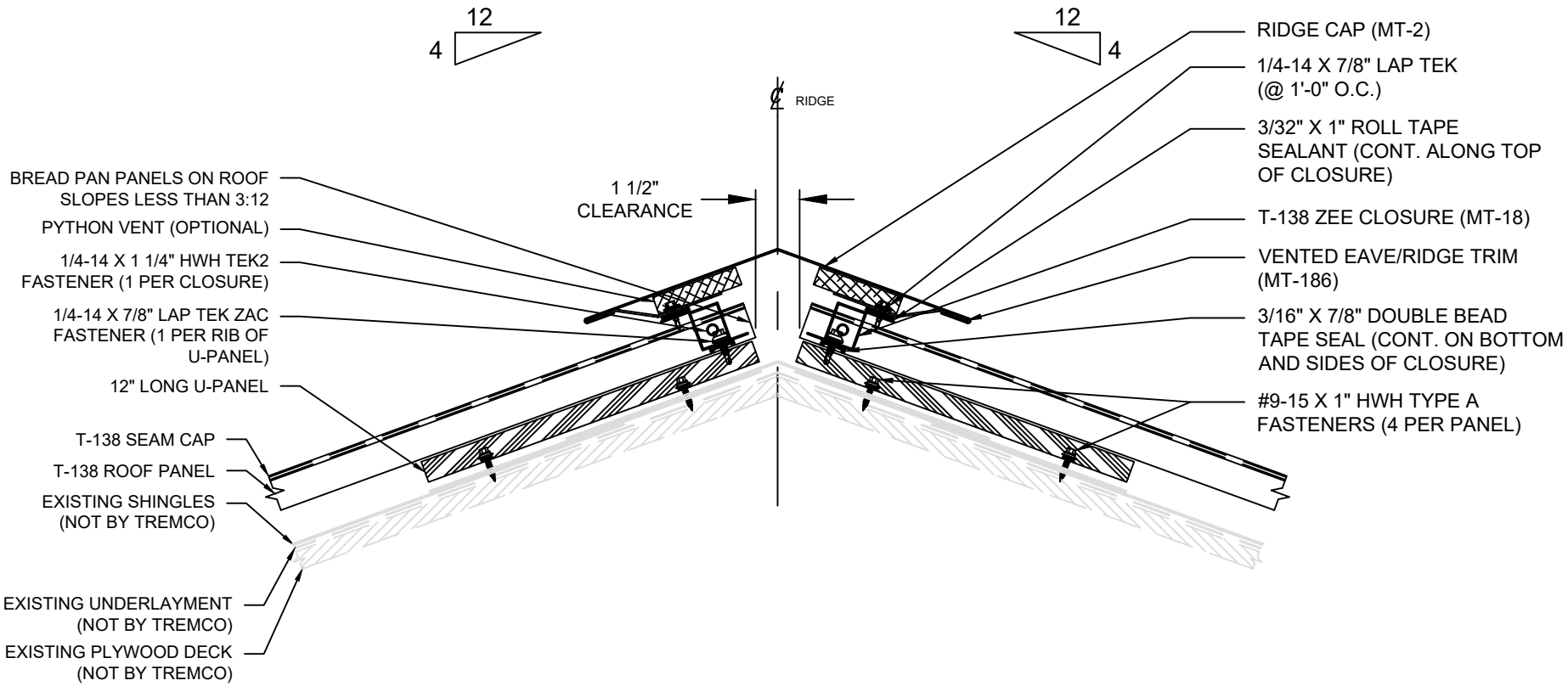

TREMCO
Roofing & Building Maintenance

SHEET TITLE:

TREMLOCK T-138 OVER SHINGLES RIDGE

SCALE:
NTS

DRAWING No.:
DWG NO. T-138-30

2023