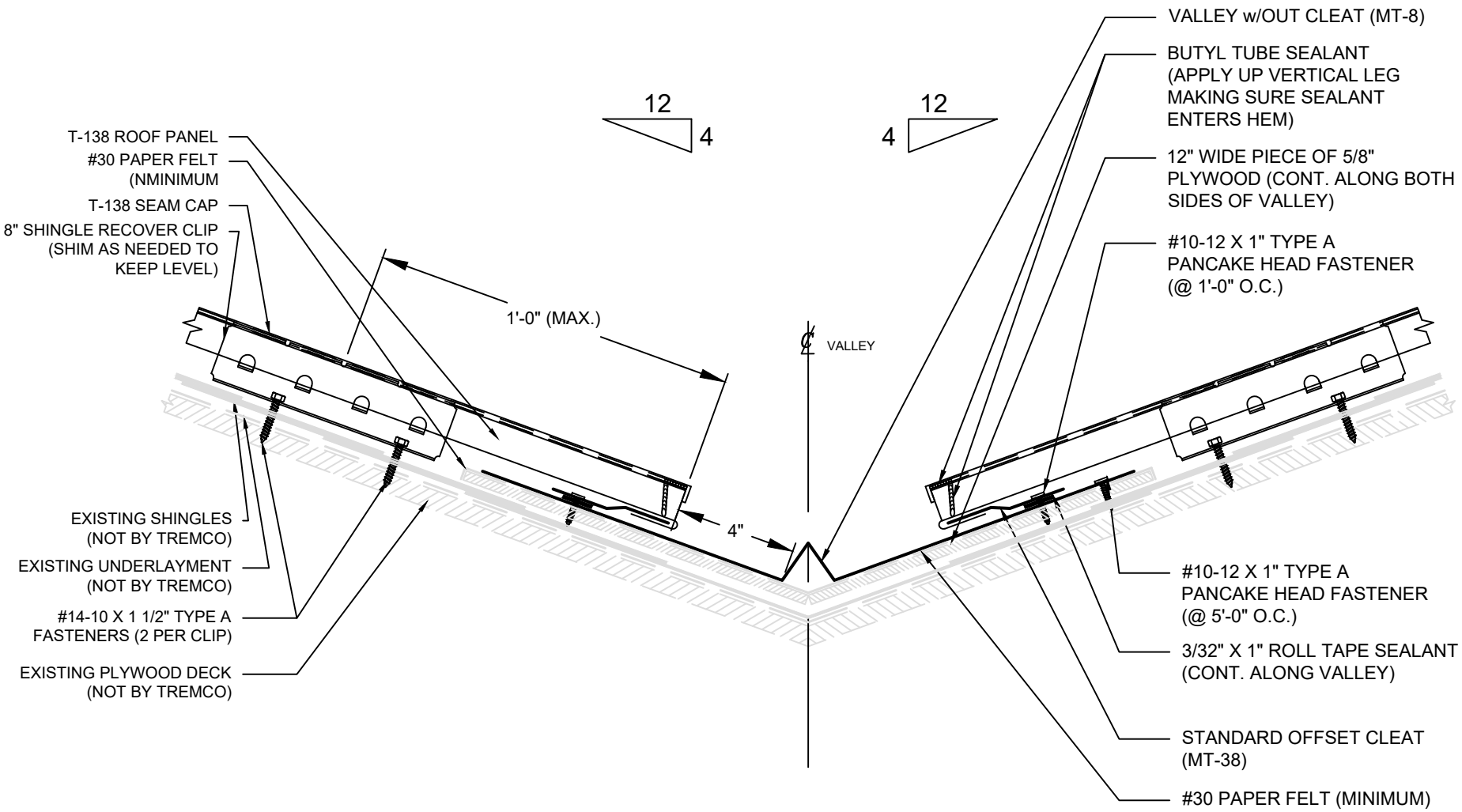

TREMCO
Roofing & Building Maintenance

SHEET TITLE:

TREMLOCK T-138 OVER SHINGLES VALLEY

SCALE: NTS

DRAWING No.: DWG NO. T-138-33

2023