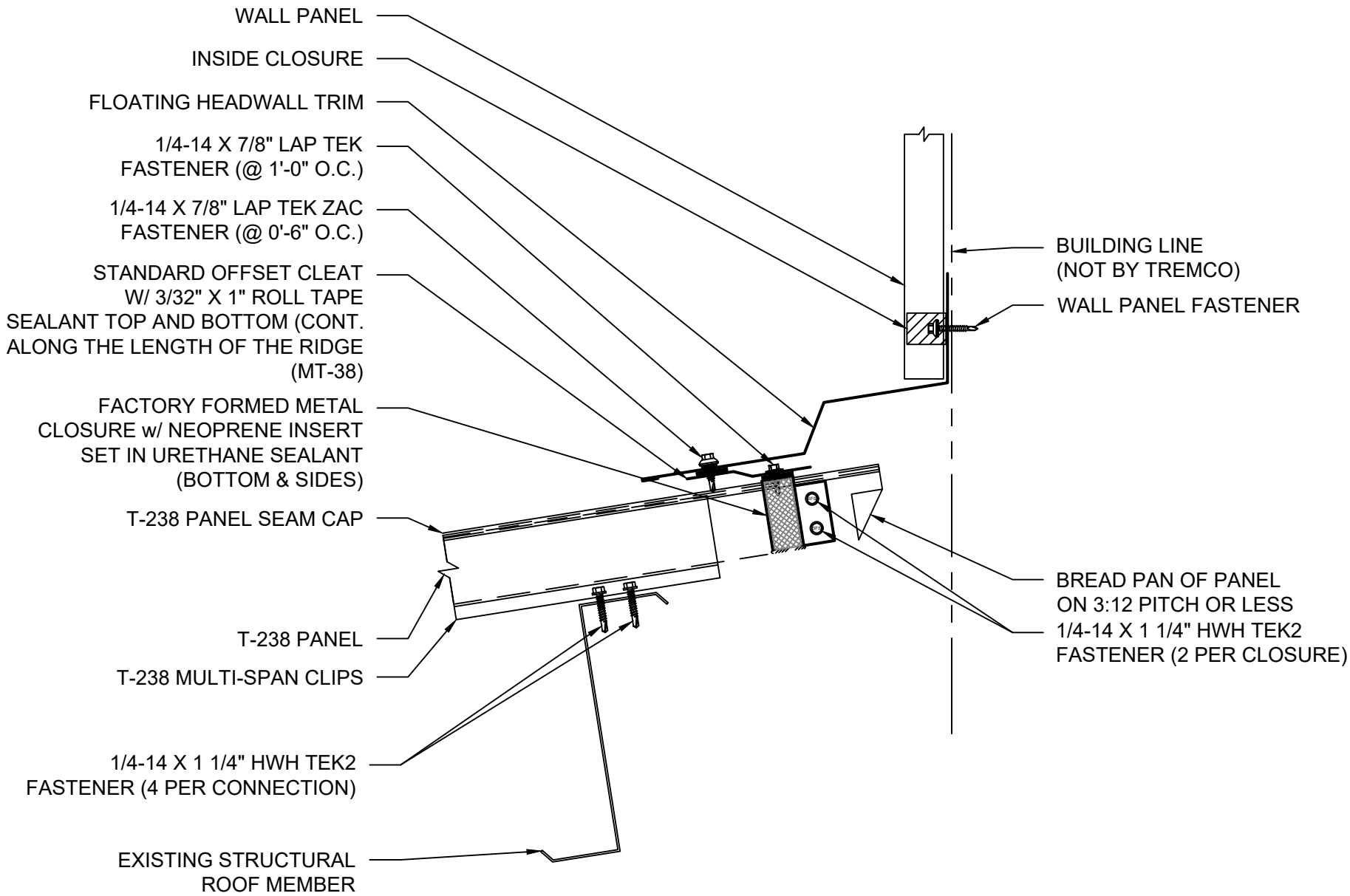

TREMCO
Roofing & Building Maintenance

SHEET TITLE:
TREMLOCK T-238 PURLIN FLOATING HIGH SIDE TIE-IN (MULTISPAN CLIPS)

SCALE: NTS

DRAWING No.: DWG NO. T-238-11

2023