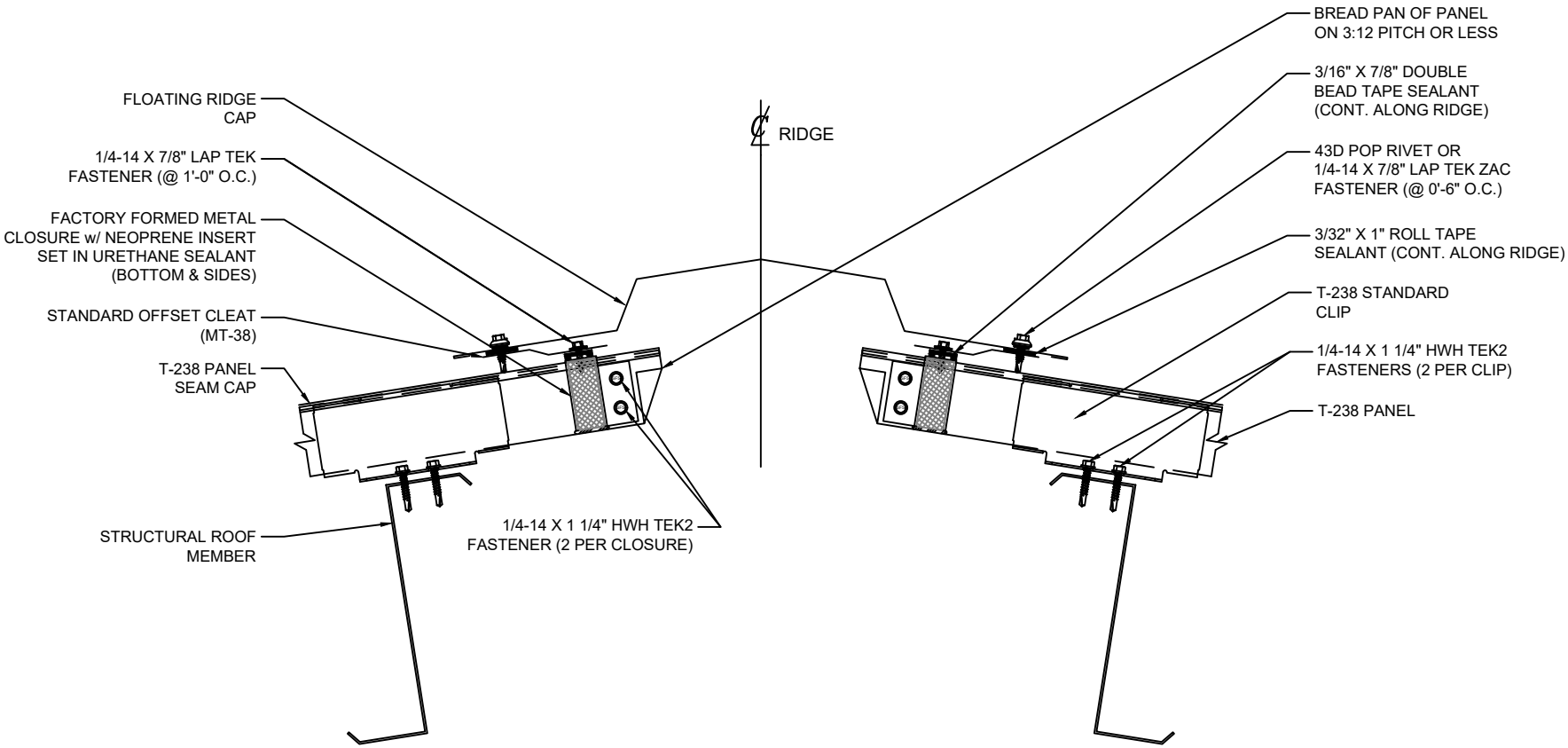

TREMCO
Roofing & Building Maintenance

SHEET TITLE:
TREMLOCK T-238 PURLIN FLOATING RIDGE (STANDARD CLIPS)

SCALE: NTS

DRAWING No.: DWG NO. T-238-87

2023