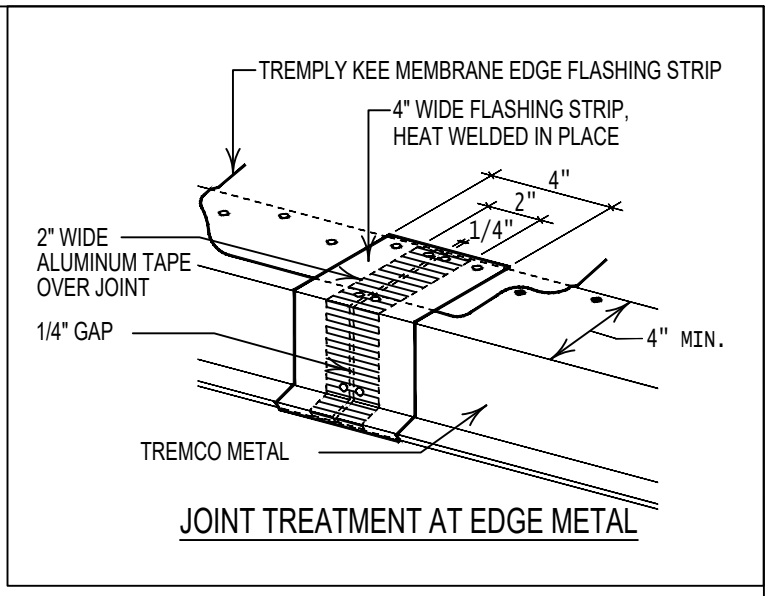

JOINT TREATMENT AT EDGE METAL

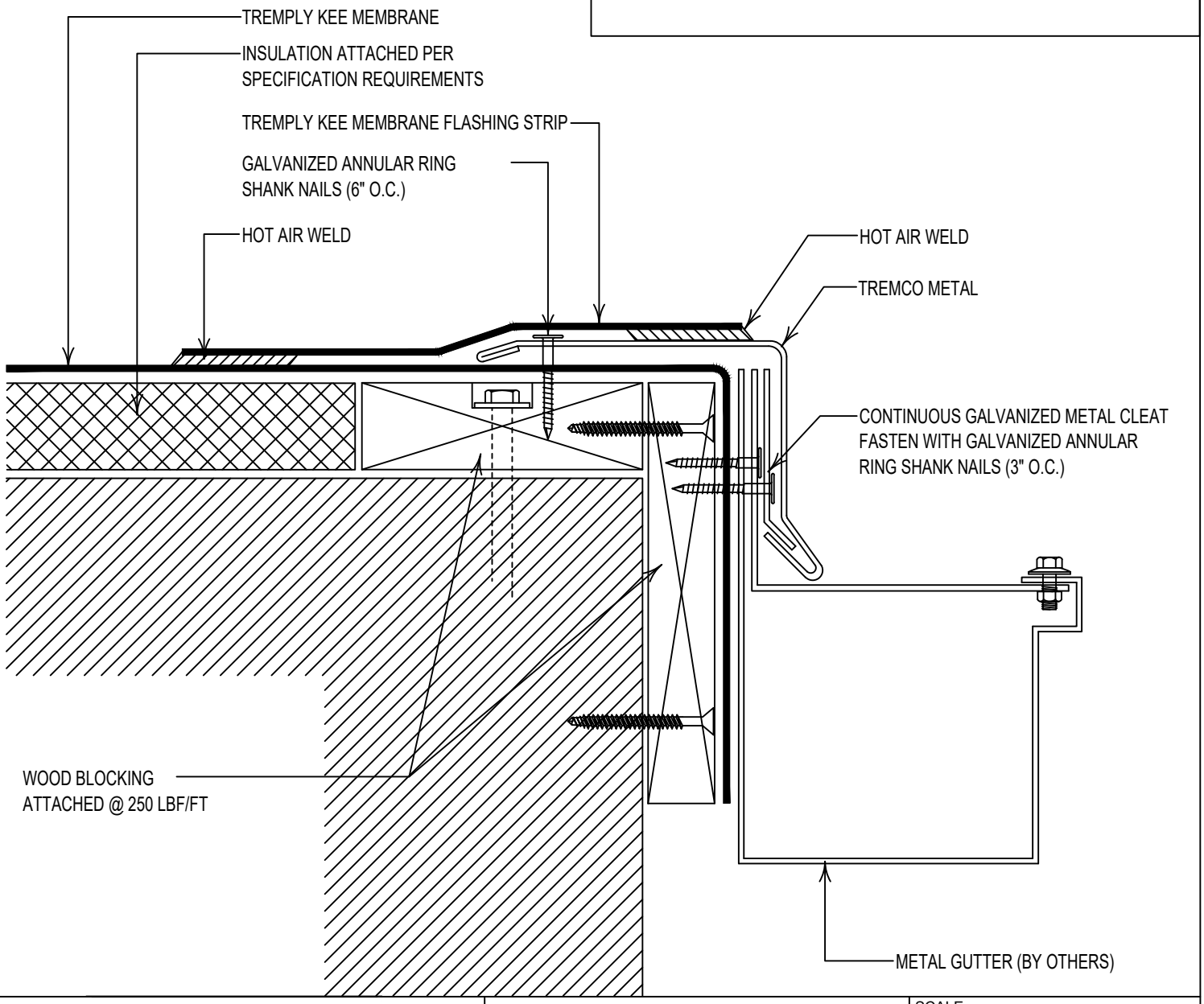

TREMCO Roofing & Building Maintenance	SHEET TITLE: GUTTER FLASHING	SCALE: NTS
		DRAWING No.: DWG NO. 53

2023