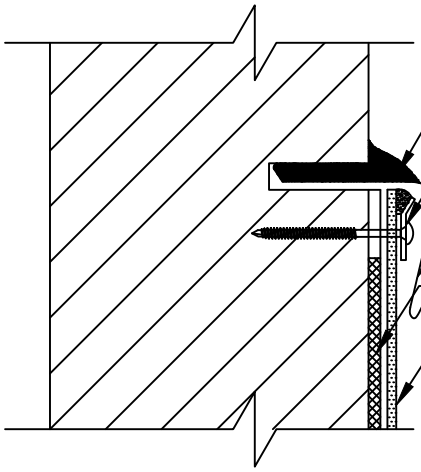

APPROVED CAULK GRADE SEALANT

APPROVED TERMINATION BAR FASTENED 12" (305 mm) O.C (OPTIONAL)

METAL COUNTERFLASHING (MAY BE FACE MOUNTED ALSO)

TPO BONDING ADHESIVE (OPTIONAL)

REINFORCED TPO MEMBRANE

1. MECHANICAL TERMINATION

NOTE: EXISTING COUNTERFLASHING MUST BE IN GOOD WORKABLE CONDITION AND TIGHT TO WALL.

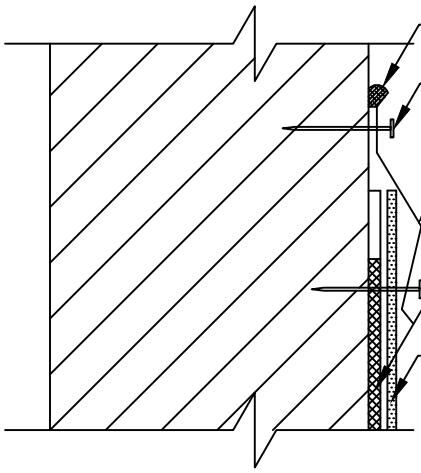

APPROVED CAULK GRADE SEALANT

APPROVED FASTENERS 12" (305 mm) O.C.

METAL SURFACE MOUNTED COUNTERFLASHING

APPROVED FASTENERS 12" (305 mm) O.C.

TPO BONDING ADHESIVE (OPTIONAL)

REINFORCED TPO MEMBRANE

2. MECHANICAL TERMINATION

NOTE: EXISTING COUNTERFLASHING MUST BE IN GOOD WORKABLE CONDITION AND TIGHT TO WALL.

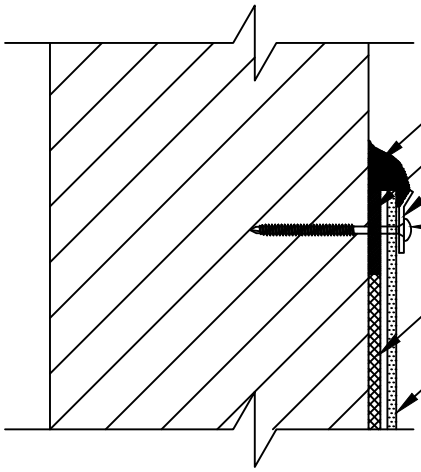

APPROVED CAULK GRADE SEALANT

TREMCO WATER-BLOCK OR APPROVED CAULK GRADE SEALANT

APPROVED TERMINATION BAR

APPROVED FASTENERS 6" (152 mm) O.C.

TPO BONDING ADHESIVE (OPTIONAL)

REINFORCED TPO MEMBRANE

TREMCO Roofing & Building Maintenance	SHEET TITLE: TERMINATION DETAIL 1-3	SCALE: NTS DRAWING No.: DWG NO. 84

2023